Konference diplomových prací 2007
Ústav konstruování, Ústav mechaniky těles, mechatroniky a biomechaniky, FSI VUT v Brně
5. – 6. června 2007, Brno, Česká republika

DESIGN OF TESLA TURBINE

Petr Bloudíček – bloudicek.petr@centrum.cz
Vysoké učení technické v Brně, fakulta strojního inženýrství, Technická 2

David Paloušek
Vysoké učení technické v Brně, fakulta strojního inženýrství, Technická 2

ABSTRACT

The aim of this thesis is to process the design of the Tesla turbine construction, its production and to carry out an experiment to guarantee its effectiveness. In the first part there is a conceptual design of the turbine construction. In the second part I am dealing with 3D model of the turbine in the suitable CAD software, then with the creation of 2D drawing documentation and finally with the prototype production. The last part is dedicated to an experimental check of the machine effectiveness, and to a comparison of the result by a numerical solution.

INTRODUCTION

Nikola Tesla is an author of many inventions including Tesla turbine. This turbine uses smooth circular disks instead of vanes, and it is placed inside the construction cabinet. The principle of the Tesla turbine comes from two main fundamentals of physics: adhesion and viscosity [1]. In 1909 Nikola Tesla registered for a patent for this turbine. The patent was accepted by patent office on the 6th May 1913 under an U.S. label #1,061,142 [2]. Within this patent Mr. Tesla lay stress on the transfer fluency of the liquid in reference to avoid slack actions as it happens within turbines with vanes [1]. These slack actions occurs only while the liquid enters in between and through the discs by owing to skid resistance [1]. Those slack actions compare to ones within the classic turbines are very slight. There was quite a big suspension from the scientists and engineers regarding this invention. However, tests showed that the turbine has a low effectiveness compare to the classic turbines such as Francis, Pelton or Kaplan. For this reason, Tesla turbine was by and by nearly forgotten even over its huge advantage, which is almost fluent transfer of the medium through the turbine without any slack actions. It had become only a historical matter of interest. The main components of Tesla turbine are shown in the picture 1. bellow. The turbine consists of cabinet (1), connection for liquid flow (4), shaft (3) and set of discs placed on the shaft (2)[3]. It is a spiral centripetal reaction turbine with turbine runner without vanes [4]. The liquid flows into the turbine through a tangential inlet and enters the system of slots in between the line of discs and in the centre (3a), where it flows out of the system. By attrition of the liquid and the discs the turbine runner is made to rotate. The centrifugal power effect through the rotation on the turbine runner between the discs provide its long spiral track [4]. With growing mechanical load of the turbine the speed drops, the centrifugal power runs low and the liquid track turns more into the centre - this makes the flow capacity through the mechanism bigger [4]. Also with the mechanical load off, the speed in growth provides the centrifugal power becoming higher. Then the liquid continues in the spiral very slowly down to the centre and the flow gets lower going through load off turbine [4]. In reference to the change in speed the mechanism becomes very flexible [4]. Mr. Tesla claimed that the total effectiveness of his turbine could reach up to 98% [5]. Professor Warner Rice tried to renew Tesla' s experiments. He used pressure air as a work substance. He reached a total effectiveness between 36% and 41% through his experiment [5]. Professor Rice published a mimeographed named "Tesla Turbomachinery" in 1990 [5], where he specified that by using analytic results the effectiveness of the rotor could be very high (up to 95%) with the effect of laminar flow [5].

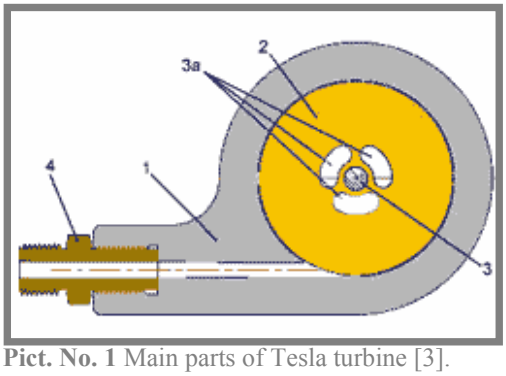

Pict. No. 1 Main parts of Tesla turbine [3].

1 DESIGN REALIZATION

Tesla turbine is designed as a prototype towards experimental verification of effectiveness and speed measure. After the experiment the Tesla turbine will be used as an educational instrument. We are talking about water turbine so the materials, of which is the turbine going to made, cannot come under rust.

1.1 Output design

To design the outlet of Tesla turbine, which works with water, there were used two options in practice. With the first option, the turbine is settled on the shaft only on one side. Through the other side water comes out from the turbine runner and then out of the turbine. Advantage of this variety is fluent transfer from the inside edge of the turbine runner out of the turbine. Disadvantage of this design is in the one-way placing of the shaft. In the second variety is the turbine placed symmetrically

on both ends of the shaft. In the middle of the shaft, under the turbine runner there are slots milled in, which lead into a drilled inlet. Through this outlet the water comes out of the turbine. Advantage of this design is the even lay-out of the power effects. Disadvantage could be spinning within the transfer between the inside diameter of the turbine runner - discs and slots in the shaft, through which the water flows. From the financial and production point of view had been decided to go for the option with hollow shaft.

1.2 Cabinet design

The prior conceptual design of the cabinet is based on a production of cabinet model by the help of Rapid prototyping technology by FDM method. Unfortunately, it was decided for production using Perspex material for the financial reasons.

1.3 Modelling, 2D drawings, production

Tesla turbine was designed and modelled by the help of Autodesk-Inventor 11 software. In the following text there are described the turbine components, which had been produced. All other materials and components such as screws, nuts, back-plates etc. were bought.

1.3.1 Disc

After a compromise with the manager of the project I decided for disc thickness of 2mm and diameter of 200mm. Within the thinner material there could occur a metal corrugation. It was used an duraluminium metal complying with the ČSN 424201.61 standard - (AlCu4Mg) for its good compactness, good deformation characters and rust resistance.

1.3.2 Shaft, sealing

The material used for the shaft is duraluminium, same as with the previous case to provide good mechanic and water-resistance characters. Gufera had been chosen to provide sealing of the shaft. Gufera had been chosen because with the classic turbine there are being used complicated labyrinth sealing with slots, which are very expensive and they have the influence on the complex of the cabinet.

1.3.3 Shaft sleeve

The shaft sleeve will be screwed to the side panels of the cabinet and will be used for the storage of the bearings and the sealing. The material used for the shaft sleeve is again duraluminium. The rare shoulder is put lower down to the shaft. This construction will allow the gufers to be more protective toward higher pressure. Between the shoulder and the sealing there would be convenient to apply water-resistant sealing vaseline to provide better sealing character.

1.3.4 Cabinet

The whole cabinet consists of the main body, side panels and the botom base. The cabinet is made of perspex.

1.3.5 Inlet

The inlet is used for connection of the nozzle or appropriate armature. On the inside surface there is a vent with a thread, to which you can fit a set-screw to avoid turning round or moving of the inlet inside the cabinet.

1.4 Assembling and dismounting

Assembling of the turbine is relatively easy, however before the actual assembly there need to be removed grinderies and frazzles from all components, and surfaces which going to be joined together should be cleaned. The whole construction of Tesla turbine had been designed as a dismountable equipment. In a case of other tests we can adjust the thickness of the inlets and the space between discs.

Pict. No. 2 Design of Tesla turbine.

For demonstration you can see in the picture above a cross section of the model of the Tesla turbine.

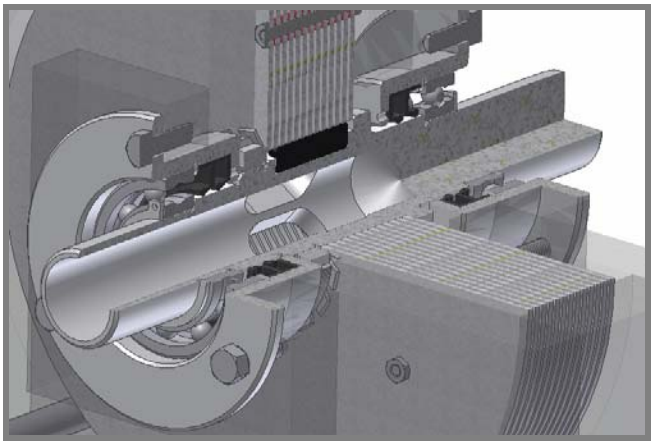

Pict. No. 3 Cross section of the Tesla turbine.

2 EXPERIMENT AND RESULTS

For the experiment it was a compulsory to be provide with a room with appropriate equipment and water resource, which is

able to be regulated. Then an equal dynamometer was needed and components for its connection into electrical circuit. Dynamometer is used for scanning the twirl moment and speed.

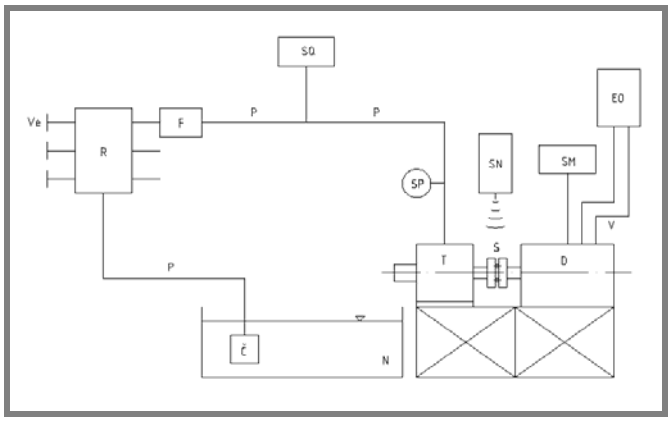

Pict. No. 4 Scheme of the experiment.

Experiment description: From the tank (N) there is by the help of deep-well pump (Č) pumped water into a distributing system (R). By the valve tap (Ve) we regulate flow into the turbine. There is a filter (F) connected to the divider to avoid letting dirt inside the turbine (T), which is the Tesla turbine sensitive to. Between filter and turbine there is attached a digital scanner (SQ) of the flow. Right before the inlet of the turbine there is superposed mechanical scanner of the pressure (SP). From one side of the turbine the water comes back to the tank and by that action it closes the hydraulic circuit. From the other side there is turbine connected by mechanic junction (S) to the dynamometer (D). There is an electric circuit with separate excitation (EO) connected to the dynamometer. There is a mechanic scanner of a twirl moment (SM) inside the dynamometer. On this mechanic scanner we can take off the existing values of the twirl moment. Through the clamps placed on the dynamometer the voltage is being measured, which is regarding the information on the label equal to 20V=1000sp/min. By the voltage measures we can work out the particular speed value of the machine. On the junction between the turbine and dynamometer there is also the speed scanned by stroboscope (SN) to compare the measures.

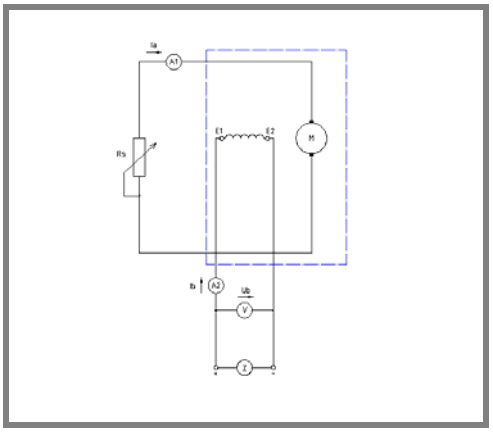

Pict. No 5 Scheme of the el. curcuit for the connection of dynamometer.

Electric circuit description: Electric circuit consist of a equal voltage resource (Z). There is a voltmeter collateral installed to the resource. The voltmeter scans the el. voltage and then it's transfer into speed in accordance to relation 20V=1000 sp/min.. In series installed ampere-meter (A1, A2) is used for the control of the flow through. Between the clamps E1 and E2 there is a coil winding, which represents the stator. Label M stands for rotor. The blue dash and dash line (stator and rotor) represents connection of the equal motor. This motor is decelerated by the help of regulating el. resistance Rs, thereby the motor loading is simulated. The complex el. scheme forms the connection of the dynamometer and the separate excitation.

2.1 Measuring

There were three main measures in progress, always for the given water flow through the system. In each of the main measures there were other four measures in progress for certain values of the load, which were set in dependence to the el. resistance Rs. Through the measuring process there was taken a record of the values of the twirl moment, the flow, pressure on the inlet of the turbine and the machine speed. The speed of the both mechanism were almost the same, the differences were in within series of units. The speed got slightly varied and they were not able to get stable – this was caused by vary of the flow given by water distributor. We can claim that speed measured by stroboscope and speed measured by dynamometer is the same. As a result, there was a control of the measuring proceed by two different independent systems.

Pict. No. 6 Photo of the turbine in a experiment process.

Tab.1 Table of values for Q1=1,21l/s=const.

number	M [N.m]	n [ot./min.]	p [MPa]
1	0,07	765	0,04
2	0,16	653	0,04
3	0,29	450	0,03
4	0,31	420	0,02

Tab.2 Table of values for Q2=1,55l/s=const.

number	M [N.m]	n [ot./min.]	p [MPa]
1	0,08	1073	0,12
2	0,14	1010	0,11
3	0,26	946	0,1
4	0,37	926	0,1

Tab.3 Table of values for Q3=1,95l/s=const.

number	M [N.m]	n [ot./min.]	p [MPa]
1	0,17	1370	0,21
2	0,32	1300	0,2
3	0,45	1240	0,2
4	0,7	795	0,15

From the tables above you can see the decrease of the speed once the load gets bigger. You can observe an interesting phenomenon in the pressure values section, where with the increasing load the pressure gets low.

2.2 Calculations

2.2.1 Theoretic machine performance

The values of density and gravity are constants. The cadence of the turbine H we do not know, however we can work out from the Pascal principle for the height and pressure rate $p = \rho \cdot g \cdot H$ (1). The pressure is already measured up same as the value of the flow Q.

$$P_{th} = \rho \cdot g \cdot H \cdot Q = p \cdot Q \qquad (2)$$

were:

Pth [W] is the theoretic machine effectiveness
Q [m³/s] - specified flow through the turbine
p [Pa] - the pressure on the inlet of the turbine
H [m] - cadence of the turbine
ρ [kg/m³] - water density
g [m/s²] - earth gravity

2.2.2 Effective (actual) machine performance

The actual machine performance we count using the measured values of the twirl moment and the speed. The speed is however needed to be transfer into a angular speed in accordance to $\omega = 2 \cdot \pi \cdot n$ (3).

$$P_{ef} = M \cdot \omega = M \cdot 2 \cdot \pi \cdot n \qquad (4)$$

were:

Pef [W] is the actual machine performance
M [N.m]- twirl moment
n [1/s] - motor speed
ω [rad/s]- angular motor speed
π [-] - Ludolph number

2.2.3 Effectiveness of the Tesla turbine

Calculation of the Tesla turbine effectiveness work out from the rate between the actual value of the performance and the theoretic value of the performance (input).

$$\eta = \frac{P_{ef}}{P_{th}} \cdot 100\% \qquad (5)$$

were:

Pef [W] is the actual machine performance
Pth [W] - theoretic machine performance
η [%] - effectiveness

Tab.4 Table of the Tesla turbine effectiveness for certain measures

number	Pef [W]	Pth [W]	η [%]
1	5,61	47,68	11,76
2	10,49	48,44	22,57
3	13,67	37,05	36,89
4	13,63	24,82	54,93
5	9	184,44	4,87
6	14,81	166,76	8,88
7	25,76	159,6	16,14
8	35,88	167,5	21,42
9	24,39	399	6,11
10	43,56	396	11
11	58,43	406	14,4
12	58,28	285	20,45

2.3 Characteristics of the Tesla turbine

The main characteristic of the turbine, in wich you can see with the increasing load the effectiveness increases.

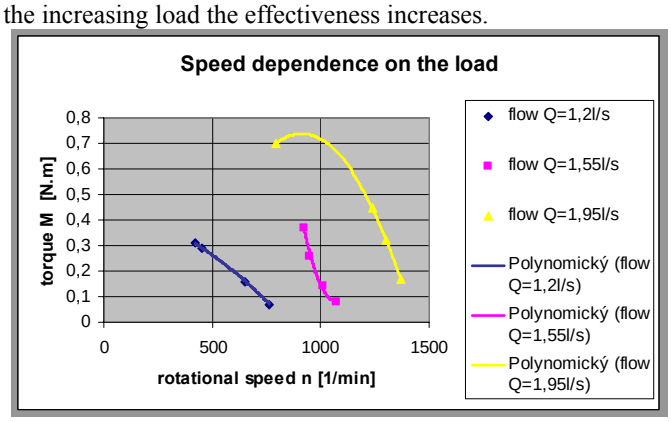

Pict. No.7 Speed dependence on the load.

Characteristic of the turbine, in which you can see that with the increasing load the effectiveness increases.

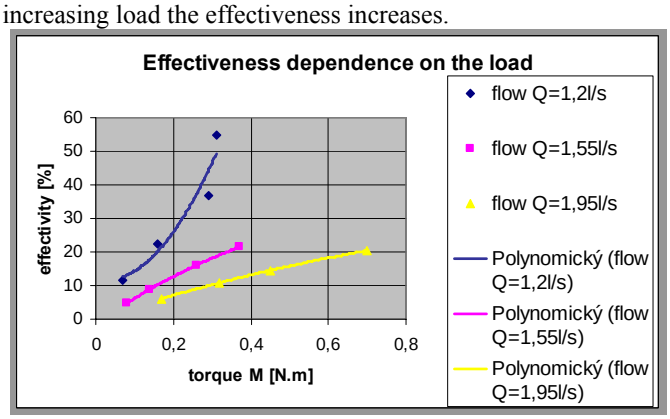

Pict. No. 8 Effectiveness dependence on the load.

This characteristic represents an interesting phenomenon, when with the growing load of the turbine the pressure decreases on the output.

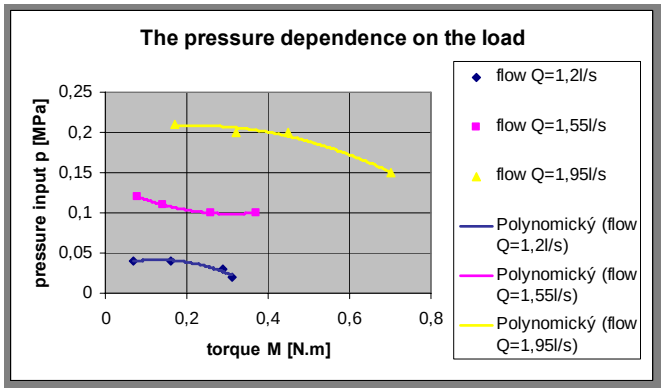

Pict. No. 9 The pressure dependence on the load.

2.4 The measuring results and numerical results comparison

Effectiveness according to the actual measured values was between 4,87% and 54,93%. From the results of work within numerical simulation at university in Vienna from the 2004, the values of Tesla turbine effectiveness were between 11% and 41% [6]. If we compare those values, we can say that, by the numerical simulation we reached the similar conclusions. The results of the numerical simulation are compare to the matter of fact more conservative. Effectiveness values of the Tesla turbine are dependent on the existing flow and the load of the machine. Effectiveness can therefore reach regarding certain flows and pressures even higher values.

3 CONCLUSION

Tesla turbine is designed as an dismountable equipment. The turbine is able to be tested with different amount of discs and different thickness of the nogs and the results of each measures we can compare. Within the Tesla turbine we got a confirmation of an interesting phenomenon, where with the increasing mechanic load of the turbine the speed decreases as well as the pressure on the inlet of the turbine. For this result, the centrifugal power gets lower and the track of the water flow through the turbine becomes shorter. Thanks to this effect, we can observe the automatic increase of the flow and the increase the turbine effectiveness. While the decrease of the mechanic load the speed increases as well as the pressure and the centrifugal power. For this result, the track of the water flow through rotor gets longer and so there occurs the automatic decrease of the flow and effectiveness. Owing to the load, the turbine regulates its effectiveness which is dependant on the flow quantity. The highest value of the turbine effectiveness 54,93% was reached for the values of the flow Q=1,192 l/s and the twirl moment M=0,31N.m. The lowest value of the effectiveness 4,87% was reached for the values of the flow Q=1,537 l/s and the twirl moment M=0,08N.m. The total price of the Tesla turbine production in reference to this construction without the performance is 3710 CZK (124 EUR). The most expensive was perspex used for the cabinet production, and the duraluminum metal used for discs production. Within the turbine there is needed to be made more measures and more tests to state what happens inside the turbine more exactly.

This thesis developed upon the support of the project VAV 13290.

ACNOWLEDGEMENT

In the first place I would like to thank to the Energetic Institute for the provided a laboratory (room) and also thank to the Production Machines, Systems and Robotics Institute for lending us the electro-engineering instruments and the equal dynamometer without its support we could have not been able to realize this project. I would also like to thank the chief of this thesis to Mr. Ing. David Paloušek for the valuable advises, to Rostislav Konečný for the production and the turbine

assembly and to Milan Bloudicek for his support through the realization of this project.

REFERENCES

[1] HOFFMAN, Russell. Tesla turbine Pump [online]. 2002, last revision 23.7.2002 [cit.2006-05-28]. <http://www.animatedsoftware.com/pumpglos/teslapum.htm>

[2] Patent Analytics and Patent Searching [online]. Last revision 18.5.2007 [cit.2006-06-08]. <http://www.freepatentsonline.com/>

[3] RS Design, Patente: Tesla turbine [online]. Last revision 21.2.2005 [cit.2006-05-20]. <http://www.r-s-design.com/RSD/frame.html>

[4] LAIKA, Viktor. Alphabet of small water gears: Tesla turbine [online]. Last revision 1.4.2004 [cit.2007-03-31]. <http://mve.energetika.cz/jineturbiny/tesla.htm>

[5] Absolute Astronomy: Tesla turbine [online]. Last revision 6.10.2006 [cit.2006-06-19]. <http://www.absoluteastronomy.com/t/teslaturbine>

[6] LADINO, Rey. Numerical Simulation of the Flow Field in a Friction-Type Turbine (Tesla turbine) [online]. [cit.2007-05-17] <http://www.zid.tuwien.ac.at/projekte/2004/04-302-3.pdf>